313311

12425

4 Hours / 70 Marks Seat No. | | | | | | | | |

Instructions : (1) All Questions are *compulsory.*

(2) Answer each next main Question on a new page.

(3) Illustrate your answers with neat sketches wherever necessary.

(4) Figures to the right indicate full marks.

(5) Assume suitable data, if necessary.

(6) Use of Non-programmable Electronic Pocket Calculator is permissible.

(7) Mobile Phone, Pager and any other Electronic Communication devices are not permissible in Examination Hall.

Marks

1. Attempt any FIVE of the following : 10

(a) Draw the conventional representation of the following :

(i) Diamond Knurling

(ii) Splined Shaft

(b) Draw a sketch to represent taper 1 : 10 on a shaft of diameter 40 mm and length 110 mm.

(c) Draw the conventional representation of the following :

(i) Short break in pipe

(ii) Gate valve

(d) Draw the symbol for representing the geometrical tolerance in case of the following :

(i) Circularity

(ii) Symmetry

(e) Draw a sketch showing basic size, lower deviation, upper deviation and tolerance.

(f) State the meaning of symbols shown in the Fig. No. 1.

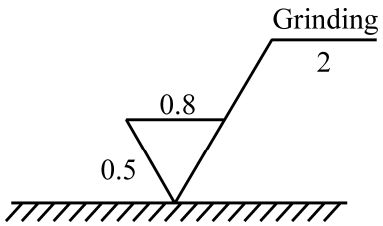

(Fig. No. 1)

(g) Show machining symbols to represent direction of lay for approximately radial relative to the center of the surface.

2. Attempt any ONE of the following : **8**

(a) Fig. No. 2 shows front view, auxiliary view and incomplete side view of an object. Redraw the given views and complete the side view.

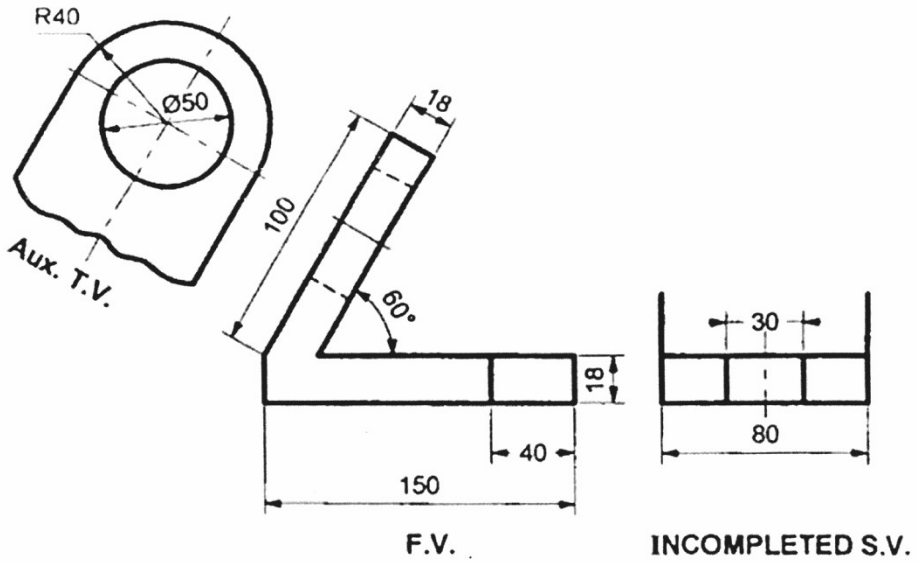

(Fig. No. 2)

(b) Fig. No. 3 shows incomplete front view, top view and auxiliary view of an object. Draw the given views and complete Front view.

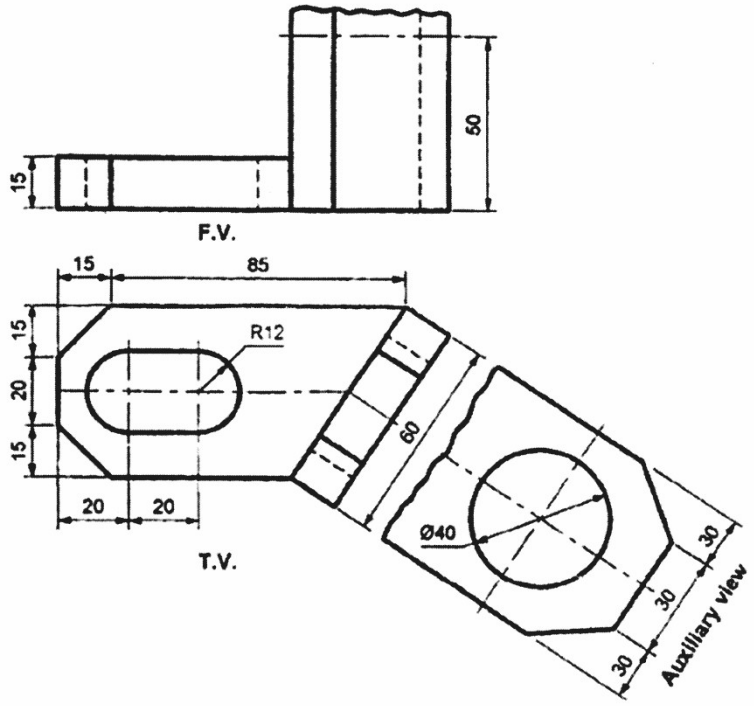

(Fig. No. 3)

3. Attempt any FIVE of the following : 20

(a) Draw the material convention of the following :

(i) Copper

(ii) Rubber

(iii) Glass

(iv) Marble

(b) Draw the conventional representation of the following :

(i) Holes on circular pitch

(ii) Bearings

(c) Draw the conventional representation of the following :

(i) Spur gear

(ii) Worm and worm wheel

(d) The shaft size is given as $40^{-0.02}_{-0.04}$ and the hole size is $40^{+0.02}_{-0.04}$. Determine the type of fit between them.

(e) Refer Fig. No. 4 and state the meaning of symbol at X & Y.

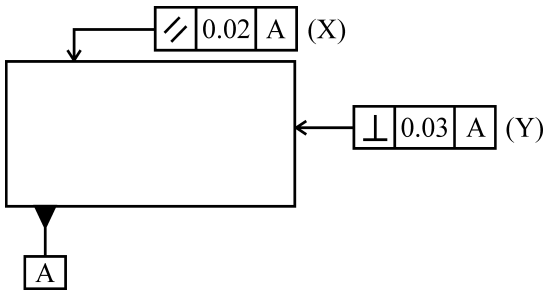

(Fig. No. 4)

(f) Two rectangular plates are to be welded with each other along the length. The thickness and length of both plates 12 mm and 60 mm respectively. The plates are to be U Butt welded with convex counter. Prepare welding drawing.

4. Attempt the following : **16**

Fig. No. 5 shown the assembly of universal coupling. Attempt any **TWO** of the following :

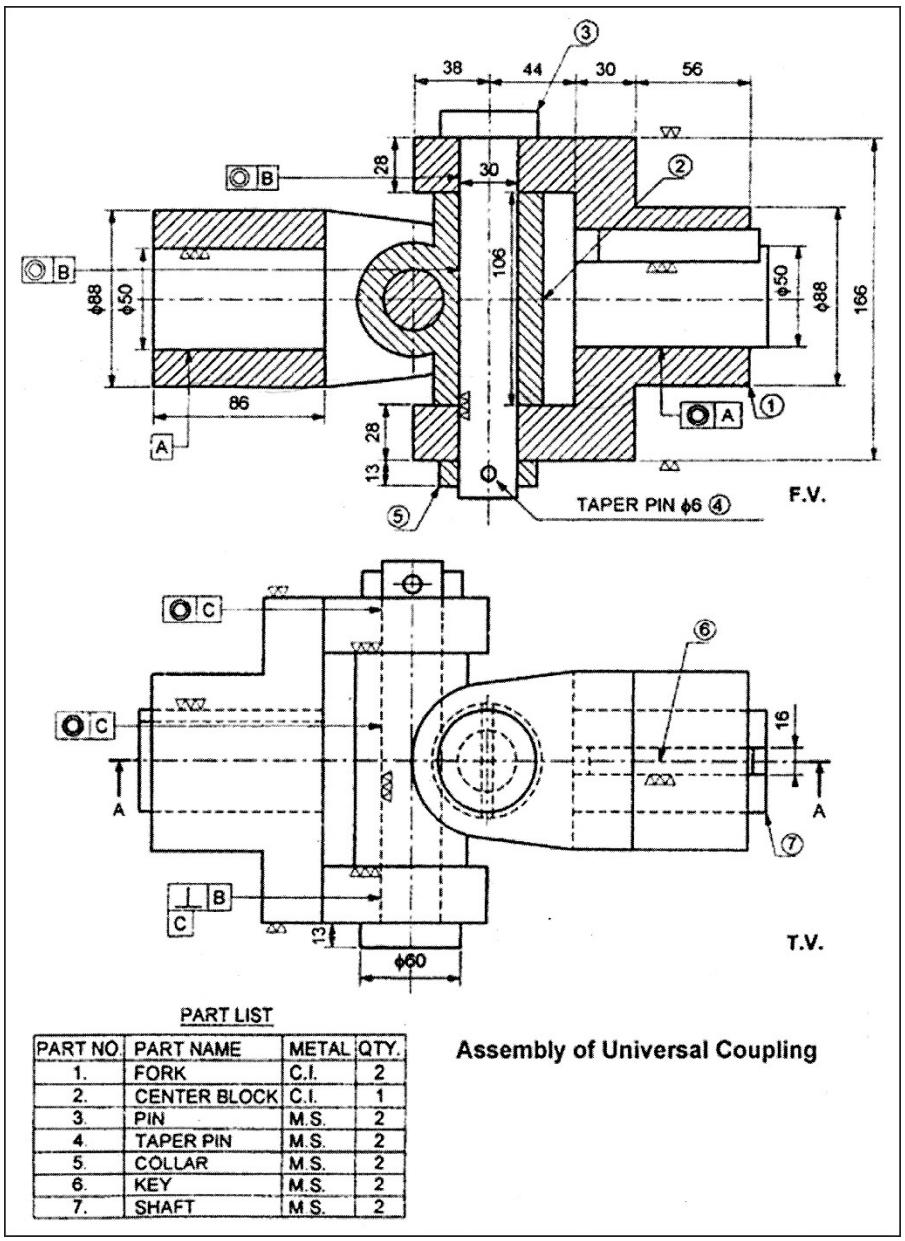

PART NO.	PART NAME	METAL	QTY.
1.	FORK	C.I.	2
2.	CENTER BLOCK	C.I.	1
3.	PIN	M.S.	2
4.	TAPER PIN	M.S.	2
5.	COLLAR	M.S.	2
6.	KEY	M.S.	2
7.	SHAFT	M.S.	2

(Fig. No. 5)

(a) Draw the sectional front view and top view of fork.

(b) Draw the front view and top view of center block and pin.

(c) Draw the front view and top view of collar, shaft and key.

5. Attempt any ONE of the following : **16**

(a) Fig. No. 6 shows the details of Oldham's coupling. Draw the following views of the assembly :

(i) Sectional Front View

(ii) Left hand Side View

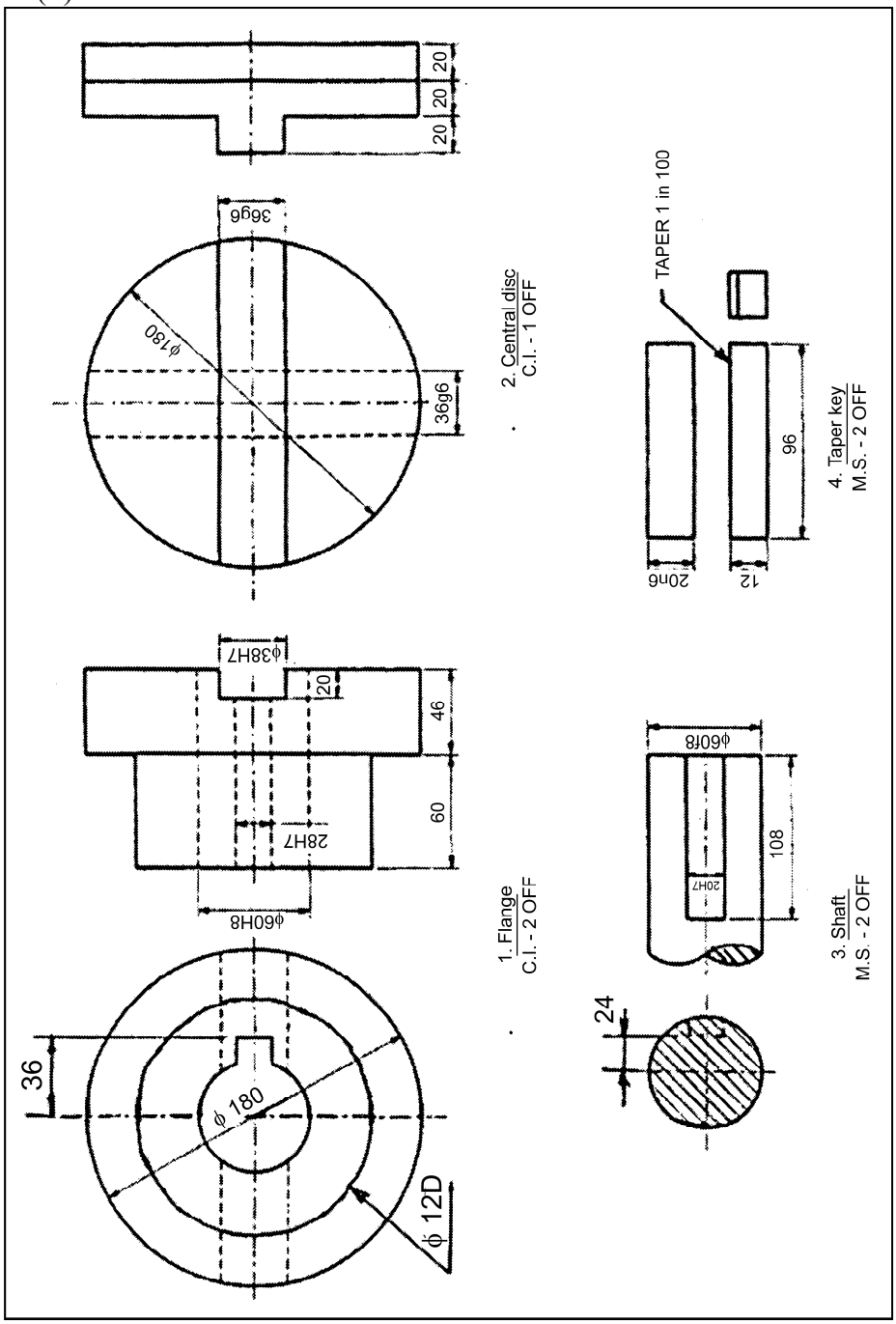

(Fig. No. 6)

(b) Fig. No. 7 shows details of lathe tool post. Draw the following views of assembly :

(i) Sectional FV

(ii) Top view

(iii) Prepare bill of material and indicate type of fit.

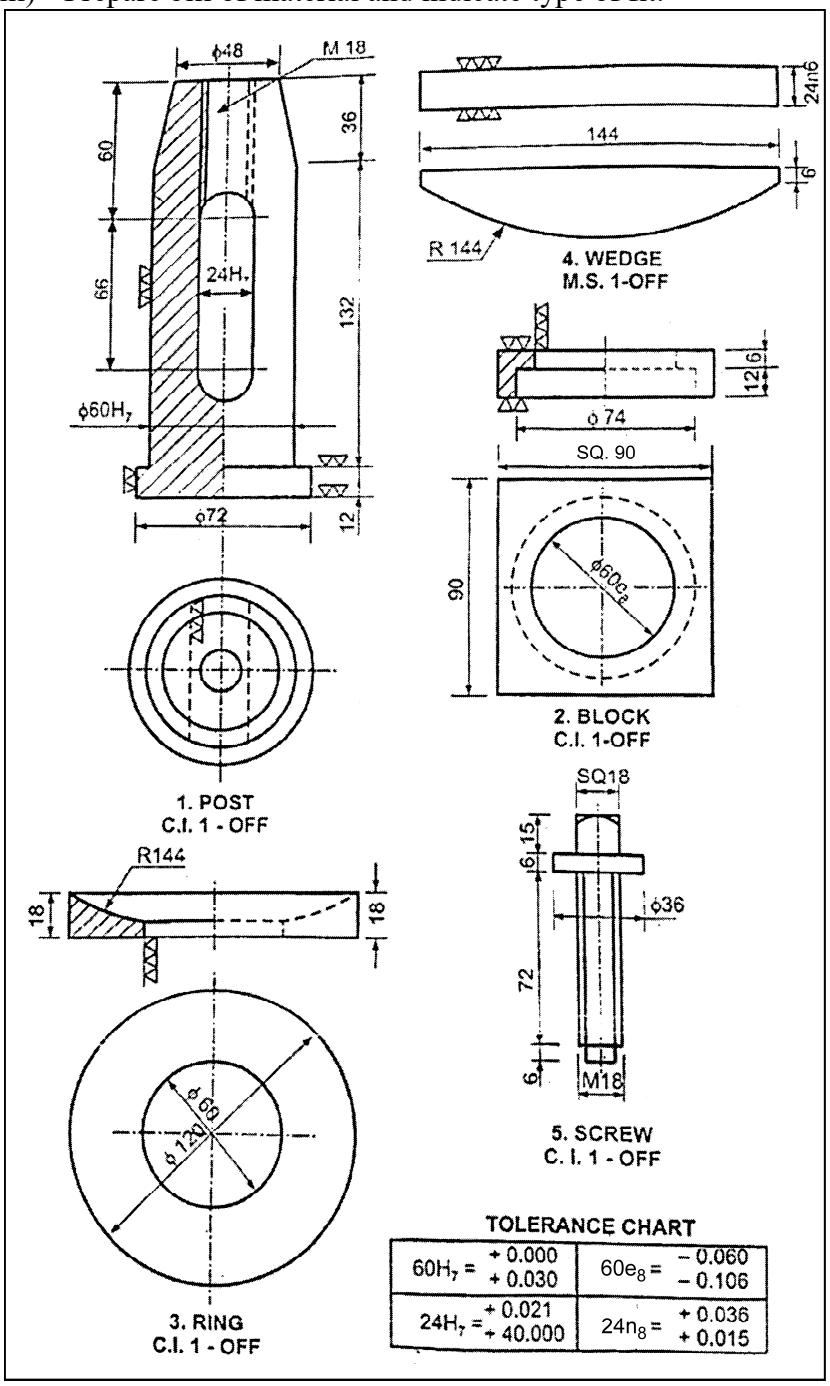

TOLERANCE CHART

$60H_7 = {}^{+0.000}_{+0.030}$	$60e_8 = {}^{-0.060}_{-0.106}$
$24H_7 = {}^{+0.021}_{+40.000}$	$24n_8 = {}^{+0.036}_{+0.015}$

(Fig. No. 7)